Overview

At A Glance

- The affordable two-way server that powers your applications today and anticipates your needs for tomorrow
- ServerWorks (RCC) 3.0 Chipset with 133-MHz Front Side Bus
- Non-Hot Plug and Hot Plug Models available
- Intel Pentium® III 1.0 GHz FC-PGA (Flip Chip-Pin Grid Array) processor (dual processor capability) with 256-KB second level ECC cache standard (full speed)
- 128-MB PC133-MHz Registered ECC SDRAM DIMM memory standard, expandable to 4 GB
- 133-MHz GTL Bus Design
- Six available PCI slots: four 64-bit PCI, two 32-bit PCI
- USB ports
- Integrated Dual Channel Wide Ultra3 SCSI Adapter
- Compaq NC3163 Fast Ethernet NIC (embedded) PCI 10/100 WOL (Wake On LAN)
- Support for up to four 1" Wide Ultra2/Ultra3 SCSI hard drives (hot-plug and non-hot-plug models available)
- Internal mass storage capacity of up to 218.4 GB (including the two removable media bays)
- Optional ML3xx Internal Two Bay Hot Plug Wide Ultra2/Ultra3 SCSI Drive Cage increases internal hot Pluggable storage capacity and allows separation of boot and OS hard drives or hot plug tape to run on a separate channel from data drives
- New Streamllines ID bezel
- Compaq ProLiant RBSU (ROM-based setup utility) support
- Compaq Insight Manager, SmartStart, ROM-based BIOS Setup Utility, and Automatic Server Recovery (ASR)
- Protected by Compaq Services, including a three-year, next business day, on-site, limited global warranty and extended Pre-Failure Warranty which covers processors, memory, and hard drives — Certain restrictions and exclusions apply. Consult the Compaq Customer Support Center at 1-800-345-1518 for details.

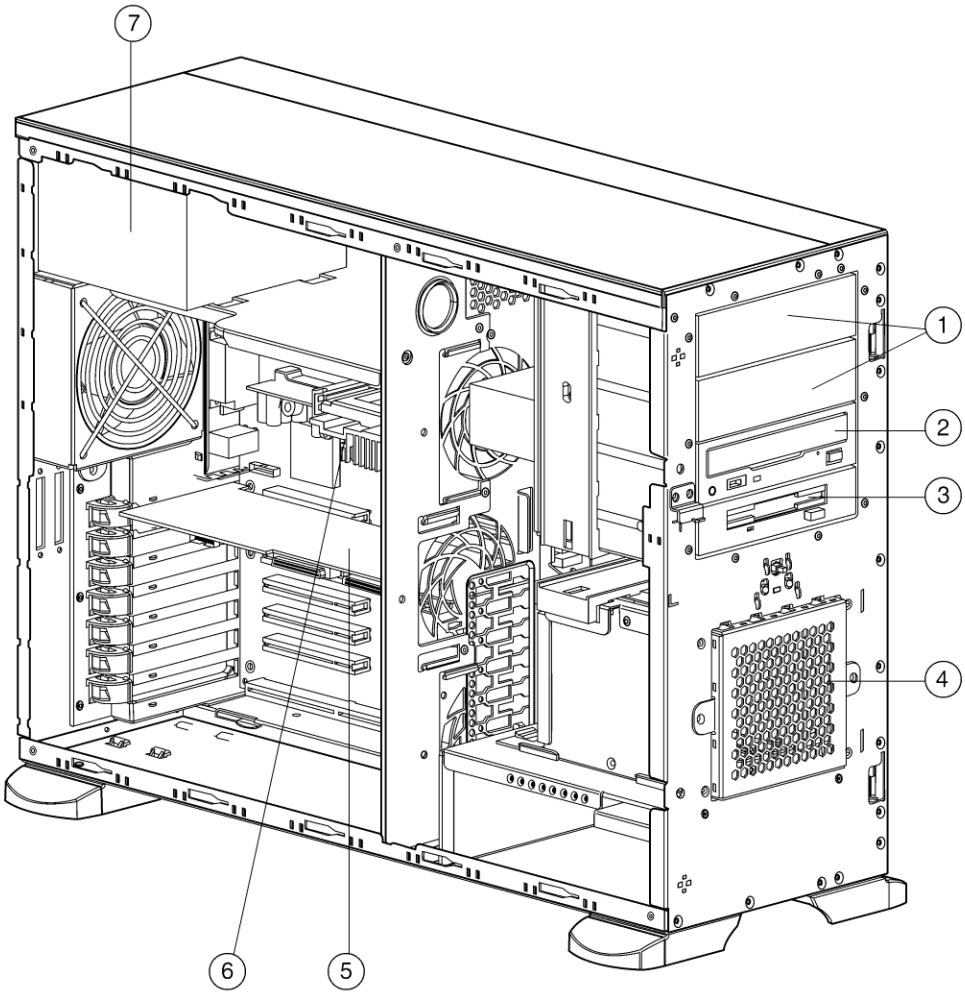

1. 5.25-inch Available Removable Media Bays
2. 32x or 40x IDE CD-ROM
3. 1.44-MB Diskette Drive
4. 4 x 1" Hot Plug or Non-Hot Plug Hard Drive Cage
5. Server Feature Board
6. Processor (second of two available sockets) with heatsink
7. 300-Watt Power Factor Correction (PFC) Power Supply

Standard Features

Processor	Intel Pentium III 1.0 GHz FC-PGA Processor		
Cache Memory	Integrated 256-KB Level 2 ECC cache (full speed)		
Upgradability	Upgradable to dual processing		
Memory	Standard	128 MB (PC133-MHz ECC Registered SDRAM DIMM memory)	
	Maximum	4 GB	
Network Controller	Compaq NC3163 Fast Ethernet NIC (embedded) PCI 10/100 WOL (Wake On LAN)		
Expansion Slots	I/O (6 Total, 6 Available)		PCI Voltage:
	64-bit/33MHz, PCI	4 (4 available)	5 Volt or universal cards
	32-bit/33MHz, PCI	2 (2 available)	5 Volt or universal cards
Storage Controller	Integrated Dual Channel Wide Ultra3 SCSI Adapter		
Storage *One of the following depending on Model*	Diskette Drives	1.44 MB	
	CD-ROM	32x or 40x IDE CD-ROM Drive	
	Hard Drives	None (1) 9.1 GB Wide Ultra3 SCSI 10,000 rpm 1″ hard drive	
	Maximum Internal Storage	145.6 GB (internal drive cage only) (4 x 36.4 GB) 218.4 GB (internal drive cage in addition to placing 36.4-GB (1″) hard drives in the two removable media bays; brackets required to place these drives come in the bezel blanks that come with the server)	
	External Storage	Two external SCSI knockouts available, but requires optional ProLiant ML350 Internal to External SCSI Cable Option Kit (PN 159547-B21)	
Interfaces	Parallel	1	
	Serial	2	
	Pointing Device (Mouse)	1	
	Graphics	1	
	Hot Plug Keyboard	1	
	Network RJ-45	1	
	USB	2 Note**:** Please see the following URL for additional information regarding USB support: www.compaq.com/products/servers/platforms/usb-support.html.	
	External SCSI knockouts	2	
Graphics	Integrated ATI RAGE XL Video Controller with 8-MB SDRAM Video Memory		
Form Factor	Tower or optional 5U rack conversion kit (PN 158438-B21)		

Standard Features

Compaq Software	Compaq *Insight Manager* 7™	Compaq Insight Manager 7 helps maximize system uptime and performance and reduces the cost of maintaining the IT infrastructure by providing proactive notification of problems before those problems result in costly downtime and reduced productivity. Compaq Insight Manager 7 is easy to set up and provides rapid access to detailed fault and performance information gathered by the Compaq Management Agents. One-click access to the Remote Insight Lights Out Edition board allows systems administrators to take full graphical control of ProLiant servers in remote locations or lights-out data centers. This dramatically reduces the need to dispatch valuable IT resources to fix routing problems.
	Compaq Management Agents	The Compaq Management Agents (http://www.compaq.com/products/servers/management/agents.html) form the foundation for Compaq's Intelligent Manageability strategy. They provide direct, browser-based access to in-depth instrumentation built into Compaq servers, workstations, desktops, and portables, and send alerts to Compaq Insight Manager XE and other management consoles in case of subsystem or environmental failures. For additional information about the Compaq Management Agents and other management product from Compaq, please visit the management website at http://www.compaq.com/manage
	Compaq *SmartStart*™	The server configuration and software integration tool from Compaq SmartStart version supported (minimum): SmartStart 4.90
	Array Configuration Utility (ACU) with Smart Array Controllers	Same easy to use yet powerful graphical user interface (GUI) configuration utility and easy to navigate wizards for all Smart Array Controllers
	Array Configuration Utility (ACU-XE) with Smart Array Controllers	Compaq Configuration Utility XE (ACU-XE) web-based software for Smart Array products and the *Storageworks*™ RAID Array 4x00 systems by Compaq allows for ease of configuration and expandability for your disk arrays, remote configuration capabilities, and multi-platform support.
Industry Standard Compliance	ACPI 2.0 Compliant PCI 2.2 Compliant WOL Support Microsoft Logo certifications	
Manageability	Compaq Insight Manager 7 Compaq Remote Insight Lights-Out Edition (optional) Compaq ProLiant RBSU (ROM Based Setup Utility) Automatic Server Recovery (ASR) Drive Parameter Tracking (with Smart Array Controller) Dynamic Sector Repairing (with Smart Array Controller) Pre-Failure Warranty (covers processors, memory and hard drives)	
Security	Power-on password Setup password Diskette boot control Parallel and serial interface control Disk configuration lock Power switch security	
Power Supply	300 Watts, Power Factor Correction (PFC), 100 to 240 VAC Rated Input Voltage (Auto-sensing), CE Mark Compliant	
Required Cabling	For required cabling information, refer to the Compaq Web site at http://www.compaq.com/products/servers/proliantML350. Note**:** This Web site is available in English only.	

Standard Features

OS Support

Microsoft Windows NT Server
Microsoft BackOffice Small Business Server
Microsoft Windows 2000
Novell NetWare
Novell NetWare Small Business Suite
SCO OpenServer 5.0.5
SCO UnixWare
IBM OS/2 Warp Family
LINUX (RedHat, S.U.S.E., TurboLinux Server, Caldera eServer)

Note**:** For a more complete and up-to-date listing of supported OSs and versions, please visit our OS Support Matrix at: ftp://ftp.compaq.com/pub/products/servers/os-support-matrix-310.pdf.

Note**:** For an up-to-date listing of the latest drivers available for the Compaq ProLiant ML350, please see: http://www.compaq.com/support/files/server/us/index.html.

Service and Support

Compaq Services provides a wide range of service offerings, including a three-year, limited warranty fully supported by a worldwide network of resellers and service providers, lifetime toll-free 7 x 24 hardware technical phone support, and Pre-Failure Warranty coverage of hard drives, memory, and processors. Disaster recovery services are available through partnership with Comdisco.

Note**:** Certain restrictions and exclusions apply. Consult the Compaq Customer Support Center at 1-800-345-1518 for details.

Models

ML350T02 P1000-256KB, 128MB, HP	**Processor**	(1) Intel Pentium III FC-PGA 1.0 GHz Processor standard (up to 2 supported)
195471-xx1	**Cache Memory**	Integrated 256-KB Level 2 ECC
	Memory	128 MB (Standard) to 4 GB (Maximum) PC133-MHz ECC Registered SDRAM DIMM
	Network Controller	Compaq NC3163 Fast Ethernet NIC (embedded) PCI 10/100 WOL
.	**Storage Controller**	Integrated Dual Channel Wide Ultra3 SCSI Adapter
	Hard drive	None ship standard
	Internal Storage	218.4 GB maximum (with optional hard drives)
	Optical Drive	32x or 40x IDE CD-ROM Drive
	Form Factor	Tower or optional 5U rack conversion kit
ML350T02 P1000-256KB, 128MB, 9.1GB, NHP	**Processor(s)**	(1) Intel Pentium III FC-PGA 1.0 GHz Processor standard (up to 2 supported)
160247-xx2	**Cache Memory**	Integrated 256-KB Level 2 ECC
	Memory	128 MB (Standard) to 4 GB (Maximum) PC133-MHz ECC Registered SDRAM DIMM
	Network Controller	Compaq NC3163 Fast Ethernet NIC (embedded) PCI 10/100 WOL
Note**:** Not available in NA.	**Storage Controller**	Integrated Dual Channel Wide Ultra3 SCSI Adapter
	Hard Drive	(1) 9.1 GB Wide Ultra3 SCSI 10,000 rpm 1" NHP drive ships standard
	Internal Storage	218.4 GB maximum (with optional hard drives)
	Optical Drive	32x or 40x IDE CD-ROM Drive
	Form Factor	Tower or optional 5U rack conversion kit
ML350T01 P1000-256KB, 128MB, NHP	**Processor(s)**	(1) Intel Pentium III FC-PGA 1.0 GHz Processor standard (up to 2 supported)
160247-xx1	**Cache Memory**	Integrated 256-KB Level 2 ECC
	Memory	128 MB (Standard) to 4 GB (Maximum) PC133-MHz ECC Registered SDRAM DIMM
	Network Controller	Compaq NC3163 Fast Ethernet NIC (embedded) PCI 10/100 WOL
	Storage Controller	Integrated Dual Channel Wide Ultra3 SCSI Adapter
	Hard drive	None ship standard
	Internal Storage	218.4 GB maximum (with optional hard drives)
	Optical Drive	32x or 40x IDE CD-ROM Drive
	Form Factor	Tower or optional 5U rack conversion kit
Country Code Key	XX=00	U.S. English
	XX=01	Australia
	XX=02	Int'l
	XX=03	UK
	XX=04	Germany
	XX=05	France
	XX=37	APD
	XX=29	Japan
	XX=AA	PRC

Options

Compaq ProLiant ML350 1.0 GHz Unique Options	Pentium III P1000-256K (FC-PGA) Processor Option Kit	207068-B21
	Compaq ProLiant ML350 Hot Plug Drive Cage Upgrade Option Kit (4 x 1″)	161275-B21
	Compaq ProLiant ML350 Tower to Rack Conversion Kit	158438-B21
	ProLiant ML350 Internal to External SCSI Cable Option Kit	159547-B21
Processor	Pentium III P1000-256K (FC-PGA) Processor Option Kit Note**:** This kit is unique to the ProLiant ML350 (1.0 GHz) systems due to the specific heatsink that comes with this Processor Option Kit.	207068-B21
Memory (DIMMs)	1024-MB PC133-MHz Registered ECC SDRAM DIMM Memory Option Kit	128280-B21
	512-MB PC133-MHz Registered ECC SDRAM DIMM Memory Option Kit	128279-B21
	256-MB PC133-MHz Registered ECC SDRAM DIMM Memory Option Kit	128278-B21
	128-MB PC133-MHz Registered ECC SDRAM DIMM Memory Option Kit	128277-B21
	64-MB PC133-MHz Registered ECC SDRAM DIMM Memory Option Kit	128276-B21
Optical Drives	12X DVD-ROM Drive Option Kit (carbon)	217053-B21
Internal Storage	Compaq ProLiant ML350 Hot Plug Drive Cage Upgrade Option Kit (4 x 1″) Note**:** When upgrading a Non-Hot Plug Model to Hot Plug, the purchase of the Hot Plug Drive Cage Upgrade Option Kit (161275-B21) is required to support hot plug (Ultra2/Ultra3) hard drives.	161275-B21
	ML3xx Internal Two Bay Hot Plug Wide Ultra2/Ultra3 SCSI Drive Cage (without fan) Note: The drive cage option kit (PN 244059-B21) has one 1″ drive bay and one 1.6″ drive bay, installed in two available removable media bays.	244059-B21
Hard Drives	***Wide Ultra3 SCSI – Universal Hot Plug***	
	36.4-GB Wide Ultra3 SCSI 10,000 rpm Drive (1″)	176496-B22
	18.2-GB Wide Ultra3 SCSI 10,000 rpm Drive (1″) Note**:** When upgrading a Non-Hot Plug Model to Hot Plug, the purchase of the Hot Plug Drive Cage Upgrade Option Kit (161275-B21) is required to support hot plug (Ultra2/Ultra3) hard drives.	142673-B22
	Wide Ultra3 SCSI – Non-Hot Plug	
	36.4-GB Wide Ultra3 SCSI 10,000 rpm Drive (1″)	176497-B21
	18.2-GB Wide Ultra3 SCSI 10,000 rpm Drive (1″)	142674-B21

Options

Storage Controllers	Compaq RAID LC2 Controller	188044-B21
	Compaq RAID LC2 Controller (Japan)	188044-291
	Smart Array 431 Controller	127695-B21
	Smart Array 431 Controller (Japan)	127695-291
	Smart Array 5302/32 Controller	166207-B21
	Smart Array 5302/32 Controller (Japan)	166207-291
	Smart Array 5302/64 Controller	124992-B21
	Smart Array 5302/64 Controller (Japan)	124992-291
	Smart Array 5304/128 Controller	158939-B21
	Smart Array 5304/128 Controller (Japan)	158939-291
	Ultra3 Channel Expansion Module for Smart Array 5300 Controller	153507-B21
	128-MB Cache Module for Smart Array 5302 Controller	153506-B21
	Advanced Data Guarding Module for Smart Array 5302 Controller	199371-B21
	256-MB Battery-Backed Cache Module Note: This 256-MB Battery-Backed Cache Module supports the Smart Array 5300 series controllers, MSA 1000 and the Smart Array Cluster Storage	254786-B21
	64-bit/66-MHz Single Channel Wide Ultra3 SCSI Adapter	154457-B21
	64-bit/66-MHz Single Channel Wide Ultra3 SCSI Adapter (Japan)	154457-291
	64-bit/66-MHz Dual Channel Wide Ultra3 SCSI Adapter	129803-B21
	64-bit/66-MHz Dual Channel Wide Ultra3 SCSI Adapter (Japan)	129803-291

Wireless HAP Solution	Compaq WL410 Wireless SMB Access Point (US)	191811-001
	Compaq WL410 Wireless SMB Access Point (Australia)	191811-011
	Compaq WL410 Wireless SMB Access Point (Europe)	191811-021
	Compaq WL410 Wireless SMB Access Point (UK)	191811-031
	Compaq WL410 Wireless SMB Access Point (Japan)	191811-291
	Compaq WL410 Wireless SMB Access Point (China)	191811-AA1
	Compaq WL410 Wireless SMB Access Point (Korea)	191811-AD1
	Compaq WL410 Wireless SMB Access Point (S. Africa)	191811-AR1
	Compaq WL510 Wireless Enterprise Access Point (US)	216709-001
	Compaq WL510 Wireless Enterprise Access Point (Australia)	216709-011
	Compaq WL510 Wireless Enterprise Access Point (Europe)	216709-021
	Compaq WL510 Wireless Enterprise Access Point (UK)	216709-031
	Compaq WL510 Wireless Enterprise Access Point (Italy)	216709-061
	Compaq WL510 Wireless Enterprise Access Point (Denmark)	216709-081
	Compaq WL510 Wireless Enterprise Access Point (Switzerland)	216709-111
	Compaq WL510 Wireless Enterprise Access Point (Japan)	216709-291
	Compaq WL510 Wireless Enterprise Access Point (China)	216709-AA1
	Compaq WL510 Wireless Enterprise Access Point (Korea)	216709-AD1
	Compaq WL510 Wireless Enterprise Access Point (S. Africa)	216709-AR1

Options

Communications	Compaq NC3123 Fast Ethernet NIC PCI 10/100 WOL	174830-B21
	Compaq NC3134 Fast Ethernet NIC 64 PCI Dual Port 10/100	138603-B21
	Compaq NC3135 Fast Ethernet Module Dual 10/100 Upgrade Module for NC3134 and NC3131	138604-B21
	Compaq NC6132 Gigabit Module 1000 SX Upgrade Module for NC3134 and NC3131	338456-B23
	Compaq NC3133 Fast Ethernet Module 100FX Upgrade Module for NC3134 and NC3131	338456-B25
	Compaq NC6136 Gigabit Server Adapter, 64-bit/66MHz, PCI, 1000 SX	203539-B21
	Compaq NC7131 Gigabit Server Adapter, 64-bit/66MHz, PCI, 10/100/1000-T	158575-B21
	Compaq NC7132 10/100/1000-T Upgrade Module for NC3134 and NC3131	153543-B21
Management Options	Compaq Remote Insight Lights-Out Edition (NA, LA)	157866-001
	Compaq Remote Insight Lights-Out Edition (EURO)	157866-021
	Compaq Remote Insight Lights-Out Edition (ADP, Japan)	157866-371
Monitors	Flat Panel TFT8030 Color Monitor Two-Tone	234362-xxx
	Flat Panel TFT5030 Color Monitor Two-Tone (Carbon/Silver)	228134-xxx
	Flat Panel TFT5015 Color Monitor (Opal)	234043-xxx
	Flat Panel TFT5015 Color Monitor Two-Tone (Carbon/Silver)	234044-xxx
	Flat Panel TFT7020 Color Monitor Two-Tone	253216-xxx
	P1220 CRT Monitor Two-Tone (Carbon/Silver)	244374-xxx
	P920 CRT Monitor Two-Tone (Carbon/Silver)	244375-xxx
	P720 CRT Monitor Two-Tone (Carbon/Silver)	244373-xxx
	V720 CRT Monitor Two-Tone (Carbon/Silver)	232944-xxx
	V720 CRT Monitor (Opal)	232943-xxx
	V570 Color Monitor	228114-xxx
	V570 Color Monitor Two-Tone (Carbon/Silver)	228113-xxx
	S920 Color Monitor (Opal)	240325-xxx
	S920 Color Monitor Two-Tone (Carbon/Silver)	240326-xxx
	S720 Color Monitor (Opal) (Lite-On) Note**:** Available in North America, Canada, and Greater China only	239286-xxx
	S720 Color Monitor Two-tone (Carbon/Silver) (Lite-On) Note**:** Available in North America, Canada, and Greater China only	239287-xxx
	S720 Color Monitor (Opal) (Samsung) Note**:** Available in APD, Latin America, EMEA, and Japan only	238992-xxx
	S720 Color Monitor Two-tone (Carbon/Silver) (Samsung) Note**:** Available in APD, Latin America, EMEA, and Japan only	238993-xxx

Options

CRT Country Code Key

NORTH AMERICA (NA) / LATIN AMERICA (LA)

Dash #	Description
-001	NA Kit with US Power Cord
-002	Carbon model with US Power Cord
-003	Touch Screen model with US Power Cord
-004	NAFTA model with US Power Cord (Made in Mexico)
-005	NA Kit with Powered Speakers
-006	GSA model with US Power Cord
-007	NH MPR model with US power cord (Made in Mexico)
-B24	TCO model without power cord (Digital Classic)
-201	EH model for Brazil (older Brazil models used -B29)
-202	EH model for Brazil Carbon (older Brazil models used -B29)
-C91	EH model for Mercosur countries
-C92	EH model for Mercosur countries Carbon
-B29	EH / ALADI model for Latin America

Note**:** All NA/LA models above are NH.

EUROPE, MIDDLE EAST AND AFRICA (EMEA)

Dash #	Description
-021	NH / TCO with Eurocord (DCE Hub)
-022	NH / MPR with Eurocord (DCE Hub) (India)
-023	NH Carbon model with Eurocord (DCE Hub)
-024	NH Touch Screen model with Eurocord (DCE Hub)
-025	NH Kit with Speakers and Eurocord
-A91	NH / TCO without power cord (Dubai hub)
-A92	NH / MPR without power cord (Dubai hub)
-031	NH / TCO with UK Cord (UK Hub)
-032	NH / MPR with UK Cord (UK Hub)
-033	NH / TCO carbon with UK Cord
-035	NH Kit with Speakers and UK Cord
-B21	SH / MPR without power cord (S. Africa Hub)
-B23	SH / TCO without power cord (S. Africa Hub)
-B27	SH / TCO Carbon without power cord (S. Africa Hub)

PACIFIC / AUSTRALIA (APD)

Dash #	Description
-B22	NH / MPR without power cord
-B24	NH / TCO without power cord
-B25	EH Carbon model without power cord
-B26	NH Touch Screen model without power cord
-011	SH model with AUZ/NZ power cord
-015	SH model with speakers AUZ/NZ power cord
-012	SH Carbon model with AUZ/NZ power cord
-AD1	NH model for Korea
-AD2	NH Carbon model for Korea
-B28	EH model without power cord
-B35	EH model with speakers no power cord (Singapore)

Options

CRT Country Code Key *(continued)*

GREATER CHINA (GCD)

Dash #	Description
-AA1	NH / China Kit with CCIB label (Local Sales)
-AA2	NH/ Carbon China Kit with CCIB label (Local Sales)
-KA1	NH / China Kit with CCIB label (External Sales/Bundles in HK)
-AB1	NH / Taiwan kit, made in Taiwan

JAPAN (CKK)

Dash #	Description
-291	NH / Japan Kit with 3-2 pin adapter
-292	NH Carbon Japan Kit with 3-2 pin adapter

TFT Country Code Key

EUROPE, MIDDLE EAST & AFRICA (EMEA)

Dash #	Description
-021	Europe
-031	UK

NORTH AMERICA

Dash #	Description
-001	NA
-B24	All NA/LA models

APD

Dash #	Description
-011	Australia/NZ

JAPAN (CKK)

Dash #	Description
-291	Japan

Tape Drives

Internal and External DAT Tape Drives

Internal 12/24-GB DAT Drive (opal)	295513-B22
Internal 12/24-GB DAT Drive (opal) (Japan)	295513-292

Note**:** Please see the Compaq 12/24 GB DAT Drive QuickSpecs for additional options such as cassettes and for an up-to-date listing of the latest O/S Support details, please see the following:
http://www5.compaq.com/products/quickspecs/10239_div/10239_div.HTML (Division/World Wide)
http://www5.compaq.com/products/quickspecs/10239_na/10239_na.HTML (North America)

Internal 20/40-GB DAT DDS-4 Tape Drive (Opal)	157769-B21
External 20/40-GB DAT DDS-4 Tape Drive (Opal)	157770-001
External 20/40-GB DAT DDS-4 Tape Drive (Opal) (Int'l)	157770-B31
External 20/40-GB DAT DDS-4 Tape Drive (Opal) (Japan)	157770-291
Internal 20/40-GB DAT, Hot Plug (Carbon)	215488-B21

Note**:** Please see the Compaq 20/40-GB DAT Tape Drive QuickSpecs for additional options such as host bus adapters, controllers, cassettes, and for an up-to-date listing of the latest O/S Support details, please see the following:
http://www5.compaq.com/products/quickspecs/10426_div/10426_div.HTML (Division/World Wide)
http://www5.compaq.com/products/quickspecs/10426_na/10426_na.HTML (North America)

Options

Tape Drives *(continued)*

Internal and External AIT Tape Drives	
Internal AIT 35-GB, LVD Tape Drive (Carbon)	216884-B21
External AIT 35-GB, LVD Tape Drive (Carbon)	216885-001
External AIT 35-GB, LVD Tape Drive (Carbon) (Int'l)	216885-B31
External AIT 35-GB,LVD Tape Drive (Carbon) (Japan)	216885-291
Internal AIT 35-GB, LVD, Hot Plug (Carbon)	216886-B21
Note**:** Please see the Compaq AIT 35GB, LVD Tape Drive QuickSpecs for additional options such as adapters, controllers, and cassettes, and for an up-to-date listing of the latest O/S Support details, please see the following: http://www5.compaq.com/products/quickspecs/10712_div/10712_div.HTML (Division/World Wide) http://www5.compaq.com/products/quickspecs/10712_na/10712_na.HTML (North America)	
Internal AIT 50-GB Tape Drive (Opal)	157766-B21
External AIT 50-GB Tape Drive (Opal)	157767-001
External AIT 50-GB Tape Drive (Opal) (Int'l)	157767-B31
External AIT 50-GB Tape Drive (Opal) (Japan)	157767-291
Internal AIT 50-GB, Hot Plug (Carbon)	215487-B21
AIT 50GB Tape Drive, 3U Rackmount	274333-B21
Note**:** Please see the Compaq AIT 50GB Tape Drive QuickSpecs for additional options such as adapters, controllers, and cassettes, and for an up-to-date listing of the latest O/S Support details, please see the following: http://www5.compaq.com/products/quickspecs/10425_div/10425_div.HTML (Division/World Wide) http://www5.compaq.com/products/quickspecs/10425_na/10425_na.HTML (North America)	
Internal AIT 100-GB Tape Drive (Carbon)	249189-B21
External AIT 100-GB Tape Drive (Carbon)	249160-001
External AIT 100-GB Tape Drive (Carbon) (Int'l)	249160-B31
Internal AIT 100-GB, Hot Plug (Carbon)	249161-B21
Note: Please see the Compaq AIT 100GB Tape Drive QuickSpecs for additional options such as adapters, controllers, and cassettes, and for an up-to-date listing of the latest O/S Support details, please see the following: http://www5.compaq.com/products/quickspecs/11062_div/11062_div.HTML (Division/World Wide) http://www5.compaq.com/products/quickspecs/11062_na/11062_na.HTML (North America)	

Internal and External DLT / SDLT Tape Drives	
Internal 20/40-GB DLT Drive (opal)	340743-B22
Internal 20/40-GB DLT Drive (opal) (Japan)	340743-292
External 20/40-GB DLT Drive (opal)	340744-B22
External 20/40-GB DLT Drive (opal) (Japan)	340744-292
Note**:** Please see the Compaq 20/40-GB DLT Drive QuickSpecs for additional options such as data and cleaning cartridges, and for an up-to-date listing of the latest O/S Support details, please see the following: http://www5.compaq.com/products/quickspecs/10234_div/10234_div.HTML (Division/World Wide) http://www5.compaq.com/products/quickspecs/10234_na/10234_na.HTML (North America)	
Internal 40/80-GB DLT Enhanced Drive	146196-B24
External 40/80-GB DLT Enhanced Drive	146197-B22
External 40/80-GB DLT Enhanced Drive (Japan)	146197-292
Note**:** Please see the Compaq 40/80-GB DLT Drive QuickSpecs for additional options such as host bus adapters, controllers, cassettes, and for an up-to-date listing of the latest O/S Support details, please see the following: http://www5.compaq.com/products/quickspecs/10658_div/10658_div.HTML (Division/World Wide) http://www5.compaq.com/products/quickspecs/10658_na/10658_na.HTML (North America)	
SDLT 110/220 Internal, All	192106-B21
SDLT 110/220 External, NA	192103-001
SDLT 110/220 External, Int'l	192103-B31
SDLT 110/220 External, Japan	192103-291
Note**:** Please see the Compaq SDLT 110/220GB Tape Drive QuickSpecs for additional options such as adapters, controllers, and media, and for an up-to-date listing of the latest O/S Support details, please see the following: http://www5.compaq.com/products/quickspecs/10772_div/10772_div.HTML (Division/World Wide) http://www5.compaq.com/products/quickspecs/10772_na/10772_na.HTML (North America)	

Options

Tape Drives *(continued)*

Internal and External DAT Autoloader

20/40-GB DAT DDS-4 8 Cassette Autoloader, Internal (Opal)	166504-B21
20/40-GB DAT 8 Cassette Autoloader External (Opal)	166505-001
20/40-GB DAT 8 Cassette Autoloader External (Opal) (Int'l)	166505-B31
20/40-GB DAT 8 Cassette Autoloader External (Opal) (Japan)	166505-291

Note**:** Please see the Compaq 20/40-GB DAT DDS-4 8 Cassette Autoloader QuickSpecs for additional options such as adapters, controllers, and cassettes, and for an up-to-date listing of the latest O/S Support details, please see the following:
http://www5.compaq.com/products/quickspecs/10518_div/10518_div.HTML (Division/World Wide)
http://www5.compaq.com/products/quickspecs/10518_na/10518_na.HTML (North America)

Tape Storage Enclosures and Arrays

Note**:** Compaq Tape Storage Enclosures and Arrays are compatible with Compaq Internal tape drive options. Please see the QuickSpecs for each Tape Enclosure and Array Model to check for tape drive compatibility. The URLs are provided below.

3U RM Storage Enclosure

3U RM Storage Enclosure, Model 0	230603-B21
3U RM Storage Enclosure, Model 2 AIT	230604-B21
3U RM Storage Enclosure, Model 2 DLT	230605-B21
3U RM Storage Enclosure, Model 2 SDLT	230606-B21

Note**:** Please see the Compaq 3U RM Storage Enclosure QuickSpecs for additional options such as adapters, controllers, and cassettes, and for an up-to-date listing of the latest O/S Support details, please see the following:
http://www5.compaq.com/products/quickspecs/10854_div/10854_div.HTML (Division/World Wide)
http://www5.compaq.com/products/quickspecs/10854_na/10854_na.HTML (North America)

Tape Automation

Entry Level Tape Libraries

SSL2020 Automated AIT Library

SSL2020 AIT Mini-Library 1 drive, 20 slot Table Top	175195-B21
SSL2020 AIT Mini-Library 2 drive, 20 slot Table Top	175195-B22
SSL2020 AIT Mini-Library 1 drive, 20 slot Rackmount	175196-B21
SSL2020 AIT Mini-Library 2 drive, 20 slot Rackmount	175196-B22
SSL2020 AIT Library Pass Thru with Transport	175312-B21
SSL2020 AIT Library Pass Thru Extender	175312-B22
AIT 50-GB Drive Add-On LVD Drive for SSL2020 AIT Library	175197-B21

Required Adapters/Controllers for SSL2020 AIT Library

64-Bit/66MHz Dual Channel Wide Ultra3 SCSI Adapter	129803-B21
64-Bit/66MHz Dual Channel Wide Ultra3 SCSI Adapter (Japan)	129803-291
SAN Access Module for Smart Array 5302 Controller	216687-B21
SAN Access Module for Smart Array 5302 Controller (Japan)	216687-291
Smart Array 5302/FC Controller	216688-B21
Smart Array 5302/FC Controller (Japan)	216688-291

Note**:** Please see the SSL2020 Automated AIT Tape Library Solution QuickSpecs for additional information including Upgrade Kits, Accessories, and SCSI Cable Kits and additional options needed for a complete solution at:
http://www5.compaq.com/products/quickspecs/10580_na/10580_na.HTML (North America)
http://www5.compaq.com/products/quickspecs/10580_div/10580_div.HTML (Division/World Wide)

Tape Automation *(continued)*

Mainstream Tape Library

TL891DLX DLT Tape Library

TL891DLX DLT Library, 1 drive Tower, LVD	157300-B21
TL891DLX DLT Library, 2 drive Tower, LVD	157300-B22
TL891DLX DLT Library, 1 drive Rack, LVD	157305-B21
TL891DLX DLT Library, 2 drive Rack, LVD	157305-B22
Add-On 40/80-GB Drive for TL891DLX, LVD	157303-B21

Required Adapters/Controllers for TL891DLX DLT Tape Library

64-Bit/66MHz Dual Channel Wide Ultra3 SCSI Adapter	129803-B21
64-Bit/66MHz Dual Channel Wide Ultra3 SCSI Adapter (Japan)	129803-291
SAN Access Module for Smart Array 5302 Controller	216687-B21
SAN Access Module for Smart Array 5302 Controller (Japan)	216687-291
Smart Array 5302/FC Controller	216688-B21
Smart Array 5302/FC Controller (Japan)	216688-291

Note**:** Please see the *StorageWorks* TL891DLX Automated DLT Tape Library QuickSpecs for additional information including Upgrade Kits, Accessories, and SCSI Cable Kits and additional options needed for a complete solution at:
http://www5.compaq.com/products/quickspecs/10733_na/10733_na.HTML (North America)
http://www5.compaq.com/products/quickspecs/10733_div/10733_div.HTML (Division/World Wide)

MSL5000 Libraries

Mainstream Tape Library

MSL5026DLX DLT Library

MSL5026DLX, 1 40/80-GB DLT, LVD Table Top	231821-B21
MSL5026DLX, 2 40/80-GB DLT, LVD Table Top	231821-B22
MSL5026DLX, 1 40/80-GB DLT, LVD Rackmount	231891-B21
MSL5026DLX, 2 40/80-GB DLT, LVD Rackmount	231891-B22

MSL5026SL SDLT Library

MSL5026SL Library, SDLT 110/220, 1 Drive, LVD, Table Top	231822-B21
MSL5026SL Library, SDLT 110/220, 2 Drives, LVD, Table Top	231822-B22
MSL5026SL Library, SDLT 110/220, 1 Drive, LVD, Rackmount	231892-B21
MSL5026SL Library, SDLT 110/220, 2 Drives, LVD, Rackmount	231892-B22
MSL5K Field Upgrade SDLT 110/220 Drive, LVD	231823-B22

Note**:** Please see the *StorageWorks* MSL5026DLX or MSL5026SL Library QuickSpecs for additional information including Upgrade Kits, Accessories, and SCSI Cable Kits and additional options needed for a complete solution at:
http://www5.compaq.com/products/quickspecs/10860_na/10860_na.HTML (North America)
http://www5.compaq.com/products/quickspecs/10860_div/10860_div.HTML (Division/World Wide)

Departmental Tape Library

MSL5052SL SDLT Library

MSL5052, 0 Drive, LVD, Rackmount	255102-B21
MSL50502SL, SDLT, 110/220, 2 Drives, LVD, Table Top	249490-B21
MSL50502SL, SDLT, 110/220, 2 Drives, LVD, Rackmount	249191-B21
MSL5K Field Upgrade SDLT 110/220 Drive, LVD	231823-B22

Note: Please see the *StorageWorks* MSL5052SL Library QuickSpecs for additional information including Upgrade Kits, Accessories, and SCSI Cable Kits and additional options needed for a complete solution at:
http://www5.compaq.com/products/quickspecs/11061_na/11061_na.HTML (North America)
http://www5.compaq.com/products/quickspecs/11061_div/11061_div.HTML (Division/World Wide)

Required Adapters for MSL5000 series Libraries

64-Bit/66MHz Dual Channel Wide Ultra3 SCSI Adapter	129803-B21
64-Bit/66MHz Dual Channel Wide Ultra3 SCSI Adapter (Japan)	129803-291

Options

External Storage - Tower	*StorageWorks* Enclosure Model 4314T (tower) by Compaq	190210-001
	StorageWorks Enclosure Model 4314T (tower) (Int'l)	190210-B31
	StorageWorks Enclosure Model 4314T (tower) (Japan)	190210-291
	Note**:** The *StorageWorks* Enclosure 4300 Family support the Wide Ultra2/Ultra3 1" Hot Plug Hard Drives.	
	StorageWorks Enclosure 4200 Redundant Power Supply Option	119826-B21
	StorageWorks Enclosure 4200 Ultra3 Single Bus I/O Module Option	190212-B21
	StorageWorks Enclosure 4200 Ultra3 Dual Bus I/O Module Option	190213-B21
	StorageWorks Enclosure Tower to Rack Conversion Kit	150213-B21
MSA1000	MSA 1000	201723-B21
	MSA 1000 Controller	218231-B21
	MSA Fibre Channel I/O Module	218960-B21
	MSA1000 Fabric Switch	218232-B21
	MSA 1000 Fibre Channel Adapter (FCA) 2101	245299-B21
	Suported Controllers for MSA1000	
	128MB Cache Module for Smart Array 5302 Controller	153506-B21
	256MB Battery Backed Cache Module	254786-B21
	Note: Please see the *StorageWorks* by Compaq Modular SAN Array 1000 QuickSpecs for additional options and configuration information at: http://www5.compaq.com/products/quickspecs/11033_na/11033_na.HTML (North America) http://www5.compaq.com/products/quickspecs/11033_div/11033_div.HTML (Division/World Wide)	
Uninterruptible Power Systems – Tower	Compaq Pro UPS 500 (300 Watt) 120V (NA)	136386-001
	Compaq Pro UPS 500 (300 Watt) 120V (Int'l)	136386-B31
	UPS Model T700 (700VA, 500 Watt), Low Voltage (NA)	204015-001
	UPS Model T700 (700VA, 500 Watt), High Voltage (Int'l)	204015-B31
	UPS Model T700 (700VA, 500 Watt), Low Voltage (Japan)	204015-291
	Compaq UPS T1000 XR (NA)	204155-001
	Compaq UPS T1000 XR (Int'l)	204155-B31
	Compaq UPS T1500 XR (NA)	204155-002
	Compaq UPS T1500 XR (Int'l)	204155-B32
	Compaq UPS T1500 XR (Japan)	204155-292
	Compaq UPS T2200 XR Low Voltage (NA)	204451-001
	Compaq UPS T2200 XR High Voltage (NA)	204451-002
	Compaq UPS T2200 XR (NA)	204451-B31
	Compaq UPS T2200 XR (Japan)	204451-291
UPS Options	SNMP Serial Port Card Note: Supports UPS XR series only.	192189-B21
	Six Port Card Note: Supports UPS XR series only.	192185-B21
	Extended Runtime Module, T1000 XR Note: 2U each, two ERM maximum	218967-B21
	Extended Runtime Module, T1500 XR/T2200 XR Note: 3U each, one ERM maximum	218969-B21
Rack Conversion Kit	Compaq ProLiant ML350 Tower to Rack Conversion Kit	158438-B21
Other	Internal Wide Ultra3 Cable Option Kit, NHP	166389-B21
	Internal Wide Ultra3 Cable Option Kit, HP	166390-B21
	ProLiant ML350 Internal to External SCSI Cable Option Kit	159547-B21

Options

Service and Support Offerings (CarePaq Services)

Hardware Services 4-Hour On-site Service	
4-Hour On-site Service, 5-Day x 9-Hour Coverage, 3 Years (2-5-2 Part Number for U.S.)	FM-EL4HR-36
4-Hour On-site Service, 5-Day x 9-Hour Coverage, 3 Years (2-5-2 Part Number for Canada)	FP-EL4HR-36
4-Hour On-site Service, 5-Day x 9-Hour Coverage, 3 Years (6-3 Part Number for U.S.)	162676-002
4-Hour On-site Service, 5-Day x 9-Hour Coverage, 3 Years (6-3 Part Number for Canada)	162676-122
4-Hour On-site Service, 5-Day x 9-Hour Coverage, 3 Years (6-3 Part Number for EMEA)	324416-002
4-Hour On-site Service, 7-Day x 24-Hour Coverage, 3 Years (2-5-2 Part Number for U.S.)	FM-EL724-36
4-Hour On-site Service, 7-Day x 24-Hour Coverage, 3 Years (2-5-2 Part Number for Canada)	FP-EL724-36
4-Hour On-site Service, 7-Day x 24-Hour Coverage, 3 Years (6-3 Part Number for U.S.)	162675-002
4-Hour On-site Service, 7-Day x 24-Hour Coverage, 3 Years (6-3 Part Number for Canada)	162675-122
4-Hour On-site Service, 7-Day x 24-Hour Coverage, 3 Years (6-3 Part Number for EMEA)	376910-022
Installation & Start-up Services	
Hardware Installation (2-5-2 Part Number for U.S.)	FM-ELINS-IN
Hardware Installation (2-5-2 Part Number for Canada)	FP-ELINS-IN
Hardware Installation (6-3 Part Number for U.S.)	401791-002
Hardware Installation (6-3 Part Number for Canada)	401791-122
Hardware Installation (6-3 Part Number for EMEA)	Quote
O/S & Hardware Installation (6-3 Part Number for EMEA) (Hardware installation plus two days O/S start-up activity (installation, configuration, network access & orientation))	Quote
Server Installation and Set-Up (Installation of the server, installation of the appropriate service tools, check to ensure device SW and firmware is loaded and installation of the operating system software (6-3 Part Number for EMEA)	204563-022
Pre-installation planning; unpack equipment, install most current Compaq HW options internal to server at same time of server installation; assemble & test; basic user information provided; Install & configure basic functionality of Win NT Operating System plus up to 2 days start-up activity, configure print & network access services, and orientation (2-5-2 Part Number for U.S.)	FP-MSTAR-01
Pre-installation planning; unpack equipment, install most current Compaq HW options internal to server at same time of server installation; assemble & test; basic user information provided; Install & configure basic functionality of Win NT Operating System plus up to 2 days start-up activity, configure print & network access services, and orientation (6-3 Part Number for U.S.)	240013-002
Pre-installation planning; unpack equipment, install most current Compaq HW options internal to server at same time of server installation; assemble & test; basic user information provided; Install & configure basic functionality of Novell NetWare Operating System plus up to 2 days start-up activity, configure print & network access services, and orientation (2-5-2 Part Number for U.S.)	FP-NSTAR-01
Pre-installation planning; unpack equipment, install most current Compaq HW options internal to server at same time of server installation; assemble & test; basic user information provided; Install & configure basic functionality of Novell NetWare Operating System plus up to 2 days start-up activity, configure print & network access services, and orientation (6-3 Part Number for U.S.)	240008-002

Options

Service and Support Offerings (CarePaq Services) *(continued)*	***CarePaq Priority Services for ProLiant Servers – Priority Level***	
	9 x 5 HW, 4-hr response, Next Available HW engineer; 9 x 5 Bronze Software Support 2-hr response for Windows NT, Windows 2000, Professional, Server or Advanced Server Operating System, Next Available Specialist (2-5-2 Part Number for U.S.)	FP-M01C1-36
	9 x 5 HW, 4-hr response, Next Available HW engineer; 9 x 5 Bronze Software Support 2-hr response for Windows NT, Windows 2000, Professional, Server or Advanced Server Operating System, Next Available Specialist (6-3 Part Number for U.S.)	239928-002
	9 x 5 HW, 4-hr response, Next Available HW engineer; 9 x 5 Bronze Software Support 2-hr response for Novell NetWare Operating System, Next Available Specialist (2-5-2 Part Number for U.S.)	FP-N01C1-36
	9 x 5 HW, 4-hr response, Next Available HW engineer; 9 x 5 Bronze Software Support 2-hr response for Novell NetWare Operating System, Next Available Specialist (6-3 Part Number for U.S.)	239968-002
	5 x 9 4-hour H/W, 5 x 9 2-hour O/S (NT & NetWare), three years (2-5-2 Part Number for Canada)	FP-CZ101-36
	5 x 9 4-hour H/W, 5 x 9 2-hour O/S (NT & NetWare), three years (6-3 Part Number for Canada)	155323-122
	5 x 9 4-hour H/W, 5 x 9 2-hour O/S (NT & NetWare), three years (6-3 Part Number for EMEA)	179834-022
	CarePaq Priority Services for ProLiant Servers – Priority 24 Level	
	24 x 7 HW, 4-hr response, Named HW engineer; 24 x 7 Bronze Software Support, 2-hr response for Windows NT, Windows 2000, Professional, Server or Advanced Server Operating System, Next Available Specialist (2-5-2 Part Number for U.S.)	FP-M02C1-36
	24 x 7 HW, 4-hr response, Named HW engineer; 24 x 7 Bronze Software Support, 2-hr response for Windows NT, Windows 2000, Professional, Server or Advanced Server Operating System, Next Available Specialist (6-3 Part Number for U.S.)	239930-002
	24 x 7 HW, 4-hr response, Named HW engineer; 24 x 7 Bronze Software Support, 2-hr response for Novell NetWare Operating System, Next Available Specialist (2-5-2 Part Number for U.S.)	FP-N02C1-36
	24 x 7 HW, 4-hr response, Named HW engineer; 24 x 7 Bronze Software Support, 2-hr response for Novell NetWare Operating System, Next Available Specialist (6-3 Part Number for U.S.)	239970-002
	7 x 24 4-hour H/W, 7 x 24 2-hour O/S (NT & NetWare), three years (6-3 Part Number for EMEA)	179839-022
	CarePaq Priority Services for ProLiant Servers – Priority Plus Level	
	7 x 24 4-hour H/W, 7 x 24 1-hour O/S (NT & NetWare), SPS account review, three years (2-5-2 Part Number for Canada)	FP-CZ301-36
	7 x 24 4-hour H/W, 7 x 24 1-hour O/S (NT & NetWare), SPS account review, three years (6-3 Part Number for Canada)	155331-122
	CarePaq Priority Services for ProLiant Servers – Priority Silver	
	24 x 7 HW, 4-hr response, Named HW engineer; 24 x 7 Silver Software Support, 1-hr response, Monday – Friday, 8AM – 5PM local time, 2-hr response after hours for Windows NT, Windows 2000, Professional, Server or Advanced Server Operating System, Technical Account Manager, Technical Newsletter, SW activity review, proactive patch notification, 1 System Healthcheck per year (2-5-2 Part Number for U.S.)	FP-M04C1-36
	24 x 7 HW, 4-hr response, Named HW engineer; 24 x 7 Silver Software Support, 1-hr response, Monday – Friday, 8AM – 5PM local time, 2-hr response after hours for Windows NT, Windows 2000, Professional, Server or Advanced Server Operating System, Technical Account Manager, Technical Newsletter, SW activity review, proactive patch notification, 1 System Healthcheck per year (6-3 Part Number for U.S.)	239932-002
	24 x 7 HW, 4-hr response, Named HW engineer; 24 x 7 Silver Subsequent System Support for Windows NT, Windows 2000, Professional, Server or Advanced Server Operating System (2-5-2 Part Number for U.S.)	FP-M24C1-36
	24 x 7 HW, 4-hr response, Named HW engineer; 24 x 7 Silver Subsequent System Support for Windows NT, Windows 2000, Professional, Server or Advanced Server Operating System (6-3 Part Number for U.S.)	239934-002
	24 x 7 HW, 4-hr response, Named HW engineer; 24 x 7 Silver Software Support, 1-hr response, Monday – Friday, 8AM – 5PM local time, 2-hr response after hours for Novell NetWare Operating System, Technical Account Manager, Technical Newsletter, SW activity review (2-5-2 Part Number for U.S.)	FP-N04C1-36

Options

Service and Support Offerings (CarePaq Services) *(continued)*	***CarePaq Priority Services for ProLiant Servers – Priority Silver*** *(continued)*	
	24 x 7 HW, 4-hr response, Named HW engineer; 24 x 7 Silver Software Support, 1-hr response, Monday – Friday, 8AM – 5PM local time, 2-hr response after hours for Novell NetWare Operating System, Technical Account Manager, Technical Newsletter, SW activity review (6-3 Part Number for U.S.)	239972-002
	24 x 7 HW, 4-hr response, Named HW engineer; 24 x 7 Silver Subsequent System Support for Novell NetWare Operating System (2-5-2 Part Number for U.S.)	FP-N24C1-36
	24 x 7 HW, 4-hr response, Named HW engineer; 24 x 7 Silver Subsequent System Support for Novell NetWare Operating System (6-3 Part Number for U.S.)	239974-002
	CarePaq Priority Services for ProLiant Servers – Priority Premier Level	
	7 x 24 2-hour H/W, 7 x 24 1-hour O/S (NT & NetWare), SPS Account Review, Proactive Management Review, named S/w rep, three years (2-5-2 Part Number for Canada)	FP-CZ501-36
	7 x 24 2-hour H/W, 7 x 24 1-hour O/S (NT & NetWare), SPS Account Review, Proactive Management Review, named S/w rep, three years (6-3 Part Number for Canada)	155335-122
	CarePaq Priority Services for ProLiant Servers – Priority Executive Premier Level	
	7 x 24 2-hour H/W, 7 x 24 30-minute O/S (NT & NetWare), SPS Account Review, Proactive Management Review, named S/w rep, three years (2-5-2 Part Number for Canada)	FP-CZ701-36
	7 x 24 2-hour H/W, 7 x 24 30-minute O/S (NT & NetWare), SPS Account Review, Proactive Management Review, named S/w rep, three years (6-3 Part Number for Canada)	155339-122
	Note**:** For more information, customer/resellers can contact www.Compaq.com/services.	

Memory

Compaq ProLiant ML350 1.0 GHz Models with FC-PGA

STANDARD MEMORY

128-MB PC133-MHz Registered ECC SDRAM DIMM installed (1 x 128-MB SDRAM DIMM)

STANDARD MEMORY PLUS OPTIONAL MEMORY

Up to 3200-MB memory is available with the optional installation of PC133-MHz Registered ECC SDRAM DIMM memory kits.

STANDARD MEMORY REPLACED WITH OPTIONAL MEMORY

Up to 4096-MB of memory is available with the removal of the standard 128-MB of memory and the optional installation of PC133-MHz Registered ECC SDRAM DIMM memory kits.

Note**:** Charts do not represent all possible memory configurations.

Memory		Slot			
		1	2	3	4
Standard	128 MB	128 MB	Empty	Empty	Empty
Optional	3200 MB	128 MB	1024 MB	1024 MB	1024 MB
Maximum	4096 MB	1024 MB	1024 MB	1024 MB	1024 MB

Following are memory options available from Compaq:

- 1024-MB PC133-MHz Registered ECC SDRAM DIMM Memory Option Kit 128280-B21
- 512-MB PC133-MHz Registered ECC SDRAM DIMM Memory Option Kit 128279-B21
- 256-MB PC133-MHz Registered ECC SDRAM DIMM Memory Option Kit 128278-B21
- 128-MB PC133-MHz Registered ECC SDRAM DIMM Memory Option Kit 128277-B21
- 64-MB PC133-MHz Registered ECC SDRAM DIMM Memory Option Kit 128276-B21

Storage

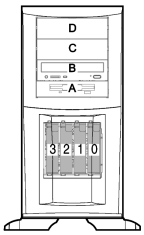

Non-Hot Plug Drive Cage

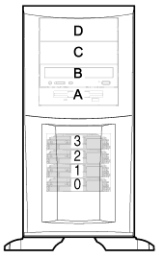

Hot Plug Drive Cage

0 – 3	4 x 1 in SCSI Hard Drive Bays
A	1.44-MB Diskette Drive
B	32x or 40x CD-ROM
C, D	Available half height bay

DRIVE SUPPORT

	Quantity Supported	Position Supported	Controller
Removable Media			
1.44-MB Diskette Drive	Up to 1	A	Integrated
IDE CD-ROM Drive	Up to 2	B, C	Integrated IDE
DVD-ROM Drive Option Kit	Up to 2	B, C	Integrated IDE
ML3xx Internal Two Bay Hot Plug Wide Ultra2/Ultra3 SCSI Drive Cage (without fan)	Up to 1	C, D	Integrated SCSI
Hard Drives			
Wide Ultra3 Hot Pluggable Drives			
1-inch 36.4-GB 10,000 rpm 18.2-GB 10,000 rpm	Up to 4	0-3	Integrated Dual Channel Wide Ultra3 SCSI Adapter Compaq RAID LC2 Controller Smart Array 431 Controller Smart Array 5300 Controller 64-bit/66-MHz Dual Channel Wide Ultra3 SCSI Adapter 64-bit/66-MHz Single Channel Wide Ultra3 SCSI Adapter
Wide Ultra3 SCSI – Non-Hot Plug			
1-inch 36.4-GB 10,000 rpm 18.2-GB 10,000 rpm	Up to 6	0-3 & C, D	Integrated Dual Channel Wide Ultra3 SCSI Adapter Compaq RAID LC2 Controller Smart Array 431 Controller Smart Array 5300 Controller 64-bit/66-MHz Dual Channel Wide Ultra3 SCSI Adapter 64-bit/66-MHz Single Channel Wide Ultra3 SCSI Adapter
External Storage			
StorageWorks Enclosure 4300 Family (supports Wide Ultra2/Ultra3 1″ drives)	Up to 20	External	Integrated Dual Channel Wide Ultra3 SCSI Adapter Smart Array 431 Controller Smart Array 5300 Controller 64-bit/66-MHz Dual Channel Wide Ultra3 SCSI Adapter 64-bit/66-MHz Single Channel Wide Ultra3 SCSI Adapter

Maximum Storage Capacity – (*StorageWorks* Enclosure)	
Internal	218.4 GB (4 x 36.4 GB + 2 x 36.4 GB hard drives)
External	110.192 TB (14 x 36.4 GB) x 20
Total	10.410 TB

Storage

DRIVE SUPPORT *(continued)*

	Quantity Supported	Position Supported	Controller
Tape Drives			
Note: For an up-to-date listing of the latest O/S Support details for each of the Tape Drives listed below, please see the following: http://www5.compaq.com/products/quickspecs/North_America/10233.html (North America) http://www5.compaq.com/products/quickspecs/Division/10233.html (Division/World Wide)			
Note: For an up-to-date listing of the latest O/S Support details for each of the Tape Storage Systems listed below, please see the following: http://www5.compaq.com/products/quickspecs/North_America/10809.html (North America) http://www5.compaq.com/products/quickspecs/Division/10809.html (Division/World Wide)			
Internal AIT 100-GB, Hot Plug Internal AIT 50-GB, Hot Plug Internal AIT 35-GB, LVD Hot Plug Internal 20/40-GB DAT Drive, Hot Plug	Up to 2	2-3	Integrated Dual Channel Wide Ultra3 SCSI Adapter Smart Array 5300 Controller 64-bit/66-MHz Dual Channel Wide Ultra3 SCSI Adapter 64-bit/66-MHz Single Channel Wide Ultra3 SCSI Adapter
20/40-GB DAT DDS-4 Tape Drive Internal 12/24-GB DAT Drive	Up to 2	C	Integrated Dual Channel Wide Ultra3 SCSI Adapter 64-bit/66-MHz Dual Channel Wide Ultra3 SCSI Adapter 64-bit/66-MHz Single Channel Wide Ultra3 SCSI Adapter
20/40-GB DAT DDS-4 8 Cassette Autoloader	Up to 2	C	Integrated Dual Channel Wide Ultra3 SCSI Adapter 64-bit/66-MHz Dual Channel Wide Ultra3 SCSI Adapter 64-bit/66-MHz Single Channel Wide Ultra3 SCSI Adapter
Internal 40/80-GB DLT Enhanced Internal 20/40-GB DLT	Up to 1	C	Integrated Dual Channel Wide Ultra3 SCSI Adapter 64-bit/66-MHz Dual Channel Wide Ultra3 SCSI Adapter 64-bit/66-MHz Single Channel Wide Ultra3 SCSI Adapter
AIT 100-GB Internal AIT 50-GB Internal AIT 35-GB, LVD Internal	Up to 2	C, D	Integrated Dual Channel Wide Ultra3 SCSI Adapter 64-bit/66-MHz Dual Channel Wide Ultra3 SCSI Adapter 64-bit/66-MHz Single Channel Wide Ultra3 SCSI Adapter
SDLT 110/220-GB, Internal	Up to 1	A, B	64-bit/66-MHz Dual Channel Wide Ultra3 SCSI Adapter 64-bit/66-MHz Single Channel Wide Ultra3 SCSI Adapter
AIT 100-GB External AIT 50-GB External AIT 35-GB, LVD External	2	External	Integrated Dual Channel Wide Ultra3 SCSI Adapter 64-bit/66-MHz Dual Channel Wide Ultra3 SCSI Adapter 64-bit/66-MHz Single Channel Wide Ultra3 SCSI Adapter
External 40/80-GB DLT Enhanced External 20/40-GB DLT	Up to 3	External	Integrated Dual Channel Wide Ultra3SCSI Adapter 64-bit/66-MHz Dual Channel Wide Ultra3 SCSI Adapter 64-bit/66-MHz Single Channel Wide Ultra3 SCSI Adapter
SDLT 110/220-GB, External	Up to 2	External	64-bit/66-MHz Dual Channel Wide Ultra3 SCSI Adapter 64-bit/66-MHz Single Channel Wide Ultra3 SCSI Adapter
SSL2020 AIT Library	Up to 5	External	64-Bit Dual Channel Wide Ultra2 SCSI Adapter 64-Bit/66MHz Dual Channel Wide Ultra3 SCSI Adapter SAN Access Module for Smart Array 5302 Controller Smart Array 5302/FC Controller
MSL5026DLX (40/80GB DLT-based) MSL5026SL (SDLT-based) Library MSL5052SL (SDLT-based) Library	2 drives per SCSI channel	External	64-Bit Dual Channel Wide Ultra2 SCSI Adapter 64-Bit/66-MHz Dual Channel Wide Ultra3 SCSI Adapter
TL891DLX DLT Library	2 drives per SCSI channel	External	64-bit Dual Channel Wide Ultra2 SCSI Adapter 64-bit/66-MHz Dual Channel Wide Ultra3 SCSI Adapter SAN Access Module for Smart Array 5302 Controller Smart Array 5302/FC Controller

Technical Specifications

System Unit	**Dimensions** (HxWxD) (with feet/bezel)	18.5 x 10.5 x 26 in/46.99 x 26.67 x 66.04 cm	
	Dimensions (HxWxD) (without feet/bezel)	17.5 x 10.5 x 24 in/44.45 x 26.67 x 60.96 cm	
	Weight (approximate)	60 lbs/27.24 kg (without hard drives)	
	Input Requirements (per power supply)	Rated Input Voltage	90 to 132 VAC/180 to 264 VAC
		Rated Input Frequency	100 to 120 VAC/200 to 240 VAC
		Input Power	492W @ 110 VAC
		Rated Input Current	6A/3A
	Line Frequency	50 to 60 Hz	
	BTU Rating	1,560 BTU/hr	
	SCSI Connectors	Two internal HD68 connectors (Support for either two internal, two external, or a mix of internal/external is available. This is achieved using an internal to external SCSI cable option kit (159547-B21) and either of the two SCSI knockouts.)	
	Power Supply Output Power (per power supply)	Rated Steady-State Power	300W
		Maximum Peak Power	400W
	Temperature Range	Operating	50° to 95° F/10° to 35°C (No direct sustaining sunlight) Altitude range derating: 33.8° F/1°C per 984.25 ft/300 m up to 9,842.5 ft/3,000 m
		Storage (up to one year) Altitudes up to 9,842.5 ft/3,000m	–4° to 140° F/–20° to 60° C
		Shipping (up to 72 hours) Altitudes up to 29,855.5 ft/9100m	–40° to 140° F/–40° to 60° C
	Relative Humidity (non-condensing)	Operating	20% to 80%
		Non-operating	5% to 90%
	Acoustic Noise	Idle (Fixed Disk Drives Spinning)	
		L_{WAd} (BELS)	5.02
		L_{pAm} (dBA)	35.9
		Operating (Random Seeks to Fixed Disks)	
		L_{WAd} (BELS)	5.87
		L_{pAm} (dBA)	40.9

Technical Specifications

1.44-MB Diskette Drive	**Diskette Size**	3.5 in/88.9 mm	
	LED Indicators (front panel)	Green	
	Read/Write Capacity per Diskette (high/low density)	1.44 MB/720 KB	
	Drive Supported	One	
	Drive Height	One-third	
	Drive Rotation	300 rpm	
	Transfer Rate (high/low)	500/250 Kb/s	
	Bytes/Sector	512	
	Sectors/Track (high/low)	18/9	
	Tracks/Side (high/low)	80/80	
	Access Times	Track-to-Track (high/low)	3/6 ms
		Average (high/low)	169/94 ms
		Settling Time	15 ms
		Latency Average	100 ms
	Cylinders (high/low)	80/80	
	Read/Write Heads	Two	

Hot Plug Wide Ultra3 SCSI Hard Drives	**36.4 GB 10K**	**Capacity**	36419.2 MB	
	176496-B22	**Height**	1 in/25.4 mm	
		Width	4.0 in/101.6 mm	
		Interface	Wide Ultra3 SCSI	
		Transfer Rate Synchronous (Maximum)	160 MB/s	
		Seek Time (typical reads, including settling)	Single Track	0.9 ms
			Average	5.7 ms
			Full-Stroke	13 ms
			Rotational Speed	10,000 rpm
		Physical Configuration	Logical Blocks	71,132,000
		Operating Temperature	50° to 95° F/10° to 35° C	
	18.2 GB 10K	**Capacity**	18209.3 MB	
	142673-B22	**Height**	1 in/25.4 mm	
		Width	4.0 in/101.6 mm	
		Interface	Wide Ultra3 SCSI	
		Transfer Rate Synchronous (Maximum)	160 MB/s	
		Seek Time (typical reads, including settling)	Single Track	0.9 ms
			Average	5.5 ms
			Full-Stroke	12 ms
			Rotational Speed	10,000 rpm
		Physical Configuration	Logical Blocks	35,566,080
		Operating Temperature	50° to 95° F/10° to 35° C	

Technical Specifications

Non-Hot Plug Wide Ultra3 SCSI Hard Drives	**36.4 GB 10K** 176497-B21	**Capacity**	36419.5 MB	
		Height	1 in/25.4 mm	
		Width	4.0 in/101.6 mm	
		Interface	Wide Ultra3 SCSI	
		Transfer Rate Synchronous (Maximum)	160 MB/s	
		Seek Time (typical reads, including settling)	Single Track	0.9 ms
			Average	5.7 ms
			Full-Stroke	13 ms
			Rotational Speed	10,000 rpm
		Physical Configuration	Bytes/Sector	512
			Logical Blocks	71,132,000
		Operating Temperature	50° to 95° F/10° to 35° C	
	18.2 GB 10K 142674-B21	**Capacity**	18209.3 MB	
		Height	1 in/25.4 mm	
		Width	4.0 in/101.6 mm	
		Interface	Wide Ultra3 SCSI	
		Transfer Rate Synchronous (Maximum)	160 MB/s	
		Seek Time (typical reads, including settling)	Single Track	0.9 ms
			Average	5.5 ms
			Full-Stroke	12 ms
			Rotational Speed	10,000 rpm
		Physical Configuration	Bytes/Sector	512
			Logical Blocks	35,565,080
		Operating Temperature	50° to 95° F/10° to 35° C	

Technical Specifications

40X Max IDE CD-ROM Drive	**Disk**	Applicable Disk	CD-ROM, CD-XA, CD-DA (Mode 1, Mode 2, Form 1 and 2) Photo CD (Single and Multi-session) Mixed Mode (Audio and Data combined) CD-R
		Capacity	540 MB (Mode 1, 12 cm) 650 MB (Mode 2, 12 cm)
	Block Size	Mode 1	2,048 bytes
		Mode 2	2,340 bytes, 2,336 bytes
		CD-DA	2,352 bytes
		CD-XA	2,328 bytes
	Interface	IDE (ATAPI)	
	Access Times (typical)	Random	100 ms
		Full-Stroke	150 ms
	Audio Output Level	Line-Out	0.7 VRMS at 47 kOhms
	Data Transfer Rate	Sustained	150 KB/s (1X audio)
		Burst	16.67 Mbytes/sec
	Cache Buffer	128 KB	
	Start-up Time (typical)	< 7 seconds	
	Stop Time	< 4 seconds	
	Laser Parameters	Type	Semiconductor Laser GaA1As
		Wave Length	780 ± 25 nm
	Operating Conditions	Temperature	41° to 113° F/5° to 45° C
		Humidity	10% to 80%
	Dimensions	(HxWxD, maximum)	1.7 x 5.85 x 8.11 in/4.29 x 150 x 208 cm
		Weight	2.09 lbs/0.95 kg

Technical Specifications

32X Max IDE CD-ROM Drive	**Disk**	Applicable Disk	CD-ROM (Mode 1 and 2) CD-DA, CD-XA (Mode 2, Form 1 and 2), CD-I ready Photo CD (Single and Multi-session) Mixed Mode (Audio and Data combined) CD-WO
		Capacity	650 MB
		Diameter	4.7 in, 3.15 in/12 cm, 8 cm
		Rotational Speed	5200 rpm maximum
		Center Hole	0.6 in/15 mm diameter
		Thickness	1.2 mm
		Track Pitch	1.6 µm
	Block Size	Mode 1	2,048, 1,024 bytes
		Mode 2	2,340, 2,336, 1,024 bytes
		CD-DA	2,352 bytes
		CD-XA	2,328 bytes
	Interface	IDE (ATAPI)	
	Access Times (typical)	Random	100 ms
		Full-Stroke	150 ms
	Audio Output Level	Line-Out	0.7 VRMS at 47 kOhms
		Headphone	0.6 VRMS at 32 Ohms (maximum volume)
	Data Transfer Rate	Sustained	150 KB/s (single)
		Burst	150 to 4800 KB/s
	Cache Buffer	128 KB	
	Start-up Time (typical)	< 7 seconds	
	Stop Time	< 4 seconds	
	Laser Parameters	Type	Semiconductor Laser GaA1As
		Wave Length	780 ± 25 nm
		Divergence Angle	53.5° ± 1.5°
		Output Power	0.14mW
	Operating Conditions	Temperature	41° to 113° F/5° to 45° C
		Humidity	10% to 80%
	Dimensions	(HxWxD, maximum)	1.69 x 5.91 x 8.2 in/4.29 x 15.01 x 20.8 cm
		Weight	2.09 lbs/0.95 kg

Technical Specifications

Integrated Dual Channel Wide Ultra3 SCSI Adapter	**Drives Supported**	Up to 28 SCSI devices (14 per channel)
	Data Transfer Method	64-bit PCI bus-master
	SCSI Channel Transfer Rate	80 MB/s per channel
	Maximum Transfer Rate per PCI Bus (peak)	133 MB/s per channel
	SCSI Protocols	Wide Ultra2 SCSI Wide-Ultra SCSI-3 Fast SCSI-2
	Electrical Protocol	Low Voltage Differential (LVD)
	SCSI Termination	Active Termination
	External SCSI Connectors	Two 80-Pin VHDCI connectors
	Internal SCSI Connectors	Two 68-Pin Wide-Ultra SCSI-3 connectors

Compaq RAID LC2 Controller	**Protocol**	Wide Ultra2 SCSI
	SCSI Electrical Interface	Low Voltage Differential (LVD)
	Drives Supported	Wide Ultra3 and Wide Ultra2 SCSI hard drives (Ultra3 drives will operate at 80 MB/s maximum transfer rate)
	SCSI Port Connectors	Single Internal SCSI port
	Data Transfer Method	32-bit PCI bus-master
	Maximum Transfer Rate on System Bus (peak)	133 MB/s
	Simultaneous Drive Transfer Channels	One
	Channel Transfer Rate	80 MB/s per channel
	Software Upgradable Firmware	Yes
	Cache Memory	8-MB Cache Performance Engine
	RAID Support	0, 1, 1+0, 5
	Note**:** A minimum of three drives is required for RAID5.	
	Logical Drives Supported	32

64-bit/66-MHz Single Channel Wide Ultra3 SCSI Adapter	**Drives Supported**	Up to 14 SCSI devices
	Storage Capacity	254.8 GB
	Data Transfer Method	64-bit/66-MHz PCI bus-master
	SCSI Channel Transfer Rate	160 MB/s per channel
	Maximum Transfer Rate per PCI Bus (peak)	532 MB/s per channel
	SCSI Protocols	Wide Ultra3 SCSI Wide Ultra2 SCSI Wide-Ultra SCSI-3 Fast-Wide SCSI-2 Fast SCSI-2
	Electrical Protocol	Low Voltage Differential (LVD)
	SCSI Termination	Active Termination
	External SCSI Connectors	One 68-pin Wide-Ultra SCSI-3 connector
	Internal SCSI Connectors	Two 68-pin Wide-Ultra SCSI-3 connectors (one LVD and one SE) One 50-pin Narrow Ultra connector

Technical Specifications

64-bit/66-MHz Dual Channel Wide Ultra3 SCSI Adapter	**Drives Supported**	Up to 28 SCSI devices (14 per channel)
	Storage Capacity	509.6 GB
	Data Transfer Method	64-bit/66-MHz PCI bus-master
	SCSI Channel Transfer Rate	160 MB/s per channel
	Maximum Transfer Rate per PCI Bus (peak)	532 MB/s per channel
	SCSI Protocols	Wide Ultra3 SCSI Wide Ultra2 SCSI Wide-Ultra SCSI-3 Fast SCSI-2
	Electrical Protocol	Low Voltage Differential (LVD)
	SCSI Termination	Active Termination
	External SCSI Connectors	Two 68-pin VHDCI connectors
	Internal SCSI Connectors	Two 68-pin Wide-Ultra SCSI-3 connectors One 50-pin Narrow Ultra connector

Smart Array 5300 Controller	**Data Compatible with all Smart Array Controllers**	Yes
	Instant Upgrades to other Smart Array Controllers	Yes
	Consistent Software Manageability Tools	Yes
	PCI Bus	64-bit, 66MHz
	PCI Peak Data Transfer Rate	533 MB/s
	SCSI Protocols Supported	Ultra3, Ultra2, Wide-Ultra
	SCSI Peak Data Transfer Rate	640 MB/s total, 160 MB/s per channel
	Channels	2, 4
	SCSI Ports (external/internal)	2 channel model: 2/2 4 channel model: 4/2
	Drives Supported (maximum)	56
	Note**:** Drives Supported (maximum) is based on use of *StorageWorks* Enclosure 4200 family. (14 hard disk drive enclosure)	
	Cache	128, 64 or 32 MB battery backed read-write
	RAID Support	0, 1, 1+0, 5, Advanced Data Guarding
	Note**:** For customers who have purchased the SA-5304/128 a quick firmware upgrades to enable the technology will be available from www.compaq.com/smartarray.	
	Note**:** RAID Support: Advanced Data Guarding (RAID ADG) is available with 128-MB versions of the SA-5300 only.	
	Logical Drives (maximum)	32
	Online Configuration	Yes
	Online Capacity Expansion	Yes
	Logical Drive Capacity Extension	Yes
	Online Stripe Size Migration	Yes
	Online RAID Level Migration	Yes
	Online Spare Support	Yes
	Automatic Data Recovery	Yes
	Drive Roaming	Yes
	Redundant Controllers	No

Technical Specifications

Smart Array 431 Controller	**Data Compatible with all Smart Array Controllers**	Yes
	Instant Upgrades to other Smart Array Controllers	Yes
	Consistent Software Manageability Tools	Yes
	PCI Bus	64-bit, 33MHz
	PCI Peak Data Transfer Rate	266 MB/s
	SCSI Protocols Supported	Ultra3, Ultra2, Wide-Ultra
	SCSI Peak Data Transfer Rate	160 MB/s
	Channels	1
	SCSI Ports (external/internal)	1/1
	Drives Supported (maximum)	14
	Note**:** Drives Supported (maximum) is based on use of *StorageWorks* Enclosure 4200/4300 family (14 hard disk drive enclosure).	
	Cache	16-MB cache engine
	RAID Support	0, 1, 1+0, 5
	Logical Drives (maximum)	32
	Online Configuration	Yes
	Online Capacity Expansion	Yes
	Logical Drive Capacity Extension	Yes
	Online Stripe Size Migration	Yes
	Online RAID Level Migration	Yes
	Online Spare Support	Yes
	Automatic Data Recovery	Yes
	Drive Roaming	Yes
	Redundant Controllers	No

Video Controller	**Controller Chip**	ATI RAGE XL
	Video DRAM	8 MB Video SDRAM
	Data Transfer Method	32-bit PCI
	Support Resolution	Supported Color Depths:
	640 x 480	16.7M, 64K, 256, 16
	800 x 600	16.7M, 64K, 256, 16
	1024 x 768	16.7M, 64K, 256, 16
	1152 x 864	16.7M, 64K, 256, 16
	1280 x 1024	16.7M, 64K, 256, 16
	1600 x 1200	64K, 256, 16
	Connector	VGA

Compaq PCs use genuine Microsoft® Windows®
www.microsoft.com/piracy/howtotell

Compaq, ProLiant, are registered in U.S. Patent and Trademark Office.
Compaq Insight Manager is a trademark and/or service marks of Compaq Information Technologies Group, L.P.
Novell and NetWare are registered trademarks of Novell, Inc. Microsoft, Windows, and Windows NT are trademarks of Microsoft Corporation. Intel, Pentium, Celeron, and Xeon are trademarks of Intel Corporation in the United States. SCO is a registered trademark of the Santa Cruz Operation, Inc. The Open Group and UNIX are trademarks of The Open Group. ORACLE is a registered trademark and ORACLE7 is a trademark of Oracle Corporation. Computer Associates JETserve and Computer Associates ARCserve are registered trademarks of Computer Associates, Inc.
All other product names mentioned herein may be trademarks or registered trademarks of their respective companies.
© 2002 Compaq Computer Corporation